P1AD-716P716P

RF Adapter, precision low PIM 7/16 male (plug) to 7/16 male (plug).

Product Features

P1AD-716P716P is a 50 Ohm RF adapter, 7/16 male (plug) to 7/16 male (plug).

Frequency: DC to 7.5 GHz with a maximum VSWR 1.15.

Low PIM design : intermodulation >165dBC.

The adapter body is brass with tin-zinc-copper alloy plating.

Electrical Specification: $T_{Ambient}$ = 25° C

Parameter	Frequency Range	Units	Min	Typical	Max	Notes
Impedance				50.0		

Mechanical And Environmental Specifications:

Parameter	Description	Notes
Connector 1	7/16 Male	
Connector 2	7/16 Male	
RoHS Compliance	Yes	

Drawing

P1dB, Inc. 188 Martinvale Lane, San Jose, CA 95119 +1(408)613-4857

sales@p1dB.com

P1AD-716P716P

RF Adapter, precision low PIM 7/16 male (plug) to 7/16 male (plug).

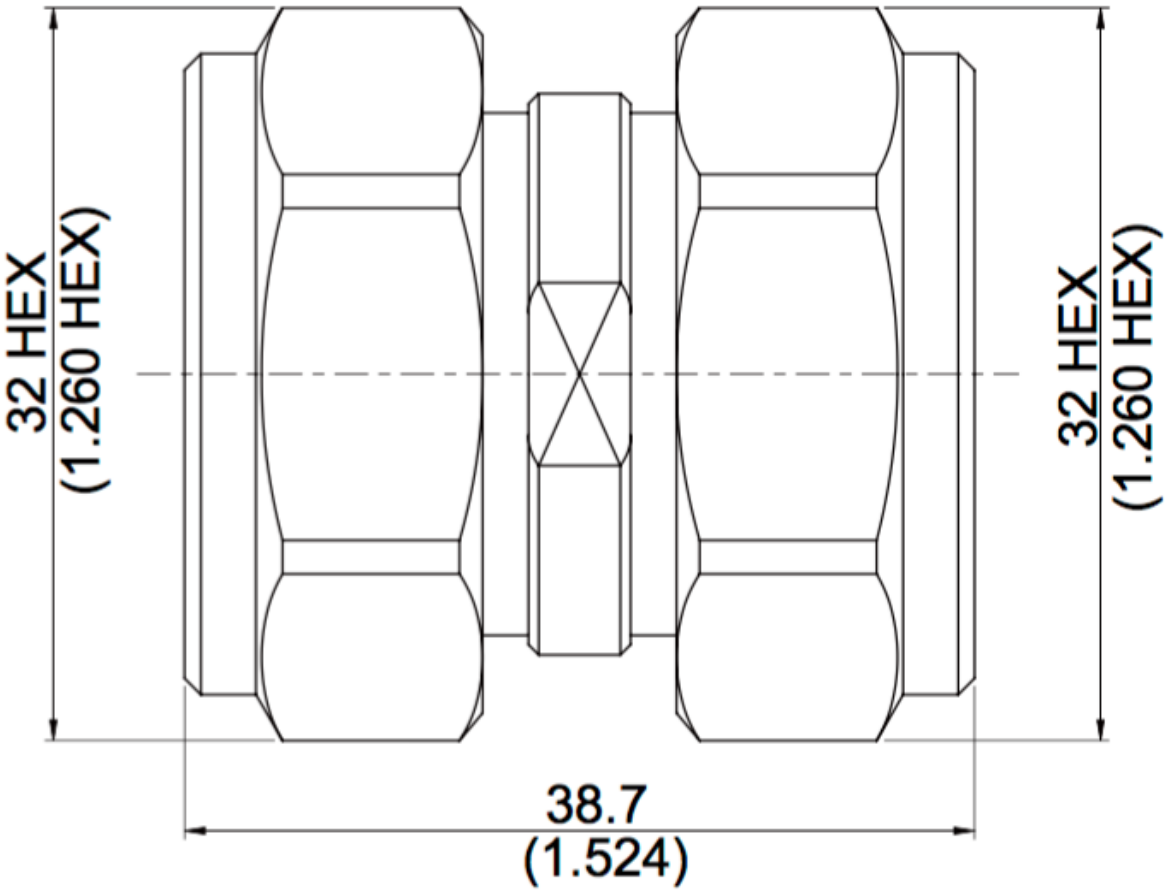

Product Notes

-55 to +125 deg C operating temp range.

Power handling : >1kW CW, DC to 6GHz.

P1dB, Inc. 188 Martinvale Lane, San Jose, CA 95119 +1(408)613-4857

sales@p1dB.com