P1CA-STMTPF-ST085-6

SMA Male to SMP Female cable assembly using ST085 Tight-Flex, Triple Shielded Coax, 6 inches long, Operating to 18 GHz.

Product Features

P1CA-STMTPF-ST085-6 is an RF Cable that is part of P1dB's Tight-Flex™ cable assembly series. It is a 6 inch SMA Male to SMP Female cable assembly that utilizes ST085 Tight-Flex, Triple Shielded coax, which is 0.104 inches in diameter. This Tight-Flex™ cable assembly operates to 18 GHz with a max VSWR of 1.35.

Tight-Flex™ cable assemblies are a flexible version of RG405 semi-rigid and 085 conformable coax cables that meet RG405 dimensional and electrical specifications. Tight-Flex™ cable assemblies can operate up to 40 GHz, depending on the installed connectors. The advantage of Tight-Flex™ cables over other 085 flex cables are their triple shielding that add additional RF stability even during tight bends.

Electrical Specification: $T_{Ambient}$ = 25° C

Parameter	Frequency Range	Units	Min	Typical	Max	Notes
Frequency Range		GHz	DC		18.0	
VSWR	DC to 1.0	1:			1.15	
	1.0 to 5.0				1.2	
	5.0 to 10.0				1.25	
	10.0 to 18.0				1.35	
Insertion Loss	DC to 1.0	dB/ft.			0.21	
	1.0 to 5.0				0.51	
	5.0 to 10.0				0.75	
	10.0 to 18.0				1.04	
Velocity Of Propagation		%		70.0		

Mechanical And Environmental Specifications:

Parameter	Description	Notes
Connector 1	SMA Male	
Connector 1 Coupling Nut	Passivated Stainless Steel	
Connector 1 Body	Passivated Stainless Steel	
Connector 1 Contact	Gold Plated Brass	
Connector 2	SMP Male	
Connector 2 Coupling Nut	None	
Connector 2 Body	Gold Plated Beryllium Copper	
Connector 2 Contact	Gold Plated Beryllium Copper	
Coax Cable	Tight-Flex, Triple Shielded	
Cable Type	ST085	
Cable Inner Conductor	SPCW	
Dielectric	PTFE	
Shield	1. SPC Tape, Aluminum Tape, SPC Braid	
Jacket	FEP	
Coax Diameter	0.104	

P1dB, Inc. 188 Martinvale Lane, San Jose, CA 95119 +1(408)613-4857

sales@p1dB.com

P1CA-STMTPF-ST085-6

SMA Male to SMP Female cable assembly using ST085 Tight-Flex, Triple Shielded Coax, 6 inches long, Operating to 18 GHz.

Parameter	Description	Notes
Minimum Bend Radius	0.2	
Length	6.0	
Operating Temprature	-55.0 to 200.0 °C	
RoHS Compliance	Yes	

Drawing

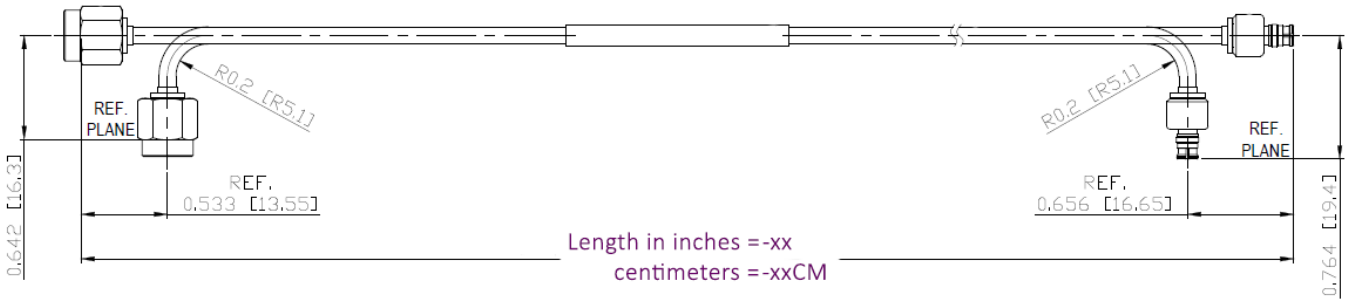

Product Notes

P1dB, Inc. 188 Martinvale Lane, San Jose, CA 95119 +1(408)613-4857

sales@p1dB.com